Recall Advisory – Mandatory Upgrade

<u>Upgrade Instructions</u> – For ONLY these TFTN model & serial numbers:

Model Name	Serial Number Range	Date Range
TFTN150	2109212238205511 – 2110062238206565	September 21, 2022, to February 28, 2023
	3260136C8222940000065 – 3260136C8230590000049	
TFTN199	2108112238202611 – 2109222238205641	August 11, 2022, to February 03, 2023
	3260137C8222940000069 – 3260137C8230340000104	

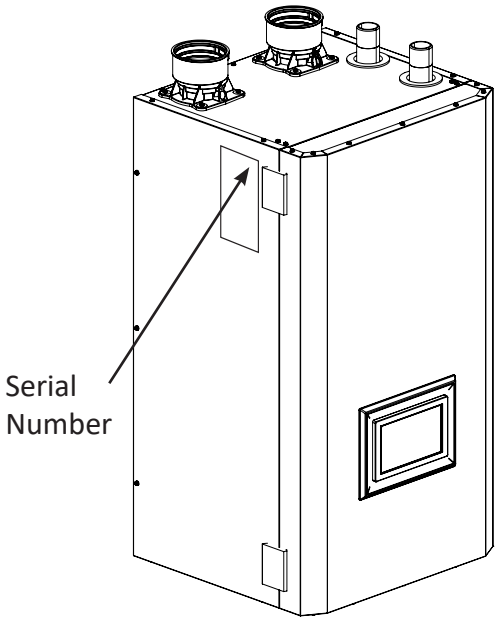

Upgrade Kit (No. 6501575700) contents:

- Replacement controller (main PCB)
- Upgrade Kit Label

Tools required:

- Screwdrivers (Flat; ¼" Hex; Phillips)
- Gas analyzer (CO; CO_2)

WARNING

The controller is configured specifically for use with TFTN series boilers only. This controller shall NOT be used with non-TFTN series boilers. Use of this controller on boiler models other than those listed in the table above will override some safety features and may lead to unsafe operation resulting in fire, explosion, property damage or death.

WARNING

These instructions must only be used by a qualified installer / service technician. Read all steps of these instructions before continuing. Perform ALL steps in the given order. Failure to do so could result in property damage, severe personal injury, or death.

The instuctions provided in this document are a supplement to the Installation and Operating Manual (IOM) originally provided with the boiler. Failure to follow the Installation and Operating Instructions may result in fire, explosion, property damage, physical injury or loss of life.

ARISTON GROUP

Recall Advisory – Mandatory Upgrade

BEFORE YOU START — De-energize the boiler and close the gas shut-off valve to the unit

STEP 1 — Inspect Condensate Dish

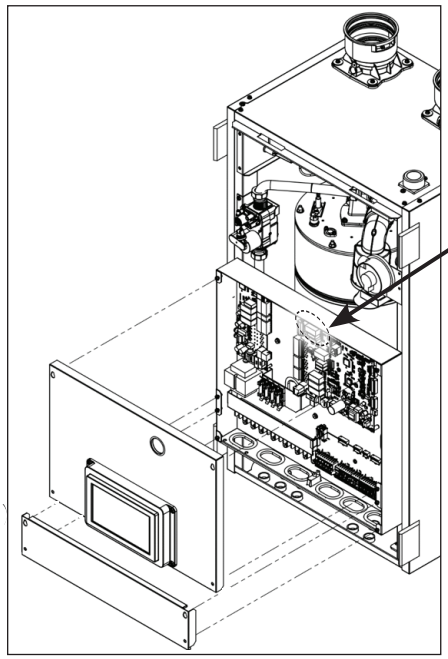

1. Remove Front Panel (4 latches)
2. Remove both Control Panel Covers (Bottom one first – 4 screws ea.; ¼" hex)
3. Disconnect HMI connector
4. Remove Side Panel* (7 screws; ¼" hex)
5. Check the external surfaces of the condensate dish for signs of damage: cracks, chips, misshapen sections, etc.
   If the dish appears compromised in <u>any way</u>, STOP using the boiler and contact Ariston Canada *<u>immediately</u>* to arrange for a replacement (at no charge).

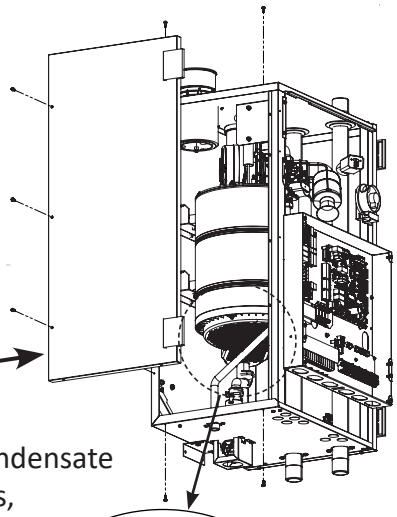

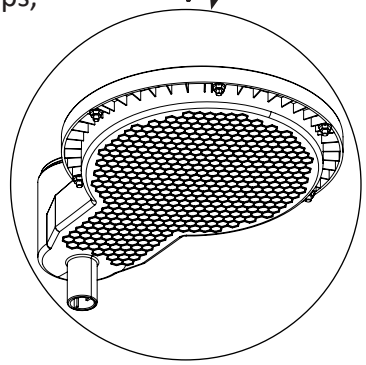

STEP 2 — Replace Controller

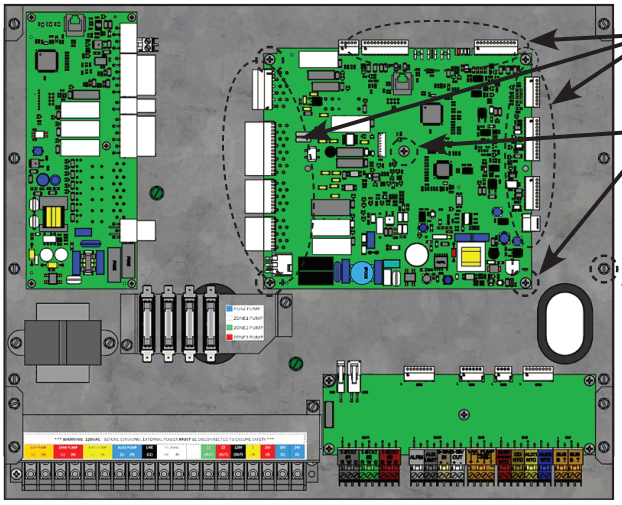

x4

x4

1. Disconnect all remaining (11) connectors from the Controller
2. Remove five (5) Phillips head screws; remove Controller
3. Install and connect new Controller (connectors are keyed to prevent misconnection)
4. Re-install HMI and Control Panel Covers

* If Side Panel access is unavailable, the Condensate Dish may be inspected by removing the Control Panel (4 x ¼" hex screws). Take care to protect the wiring by supporting the Control Panel.

CAUTION

<u>Re-energize the boiler and proceed to STEP 3</u>

<u>The gas shut-off valve must remain OFF until STEP 4</u>

ARISTON GROUP

STEP 3 — Adjust Controller Settings

WARNING

The parameters described in this step **MUST** be properly adjusted. Failure to correctly adjust the control parameters as required for the respective boiler model will cause the boiler to operate at the incorrect firing rate, thereby creating a risk of fire or explosion that could result in property damage, physical injury or loss of life.

1. Confirm S/W version: from the Home Screen, select: 'Setup' → 'Diagnostics' → 'Version' Controller (main PCB) Version: 00.53.00

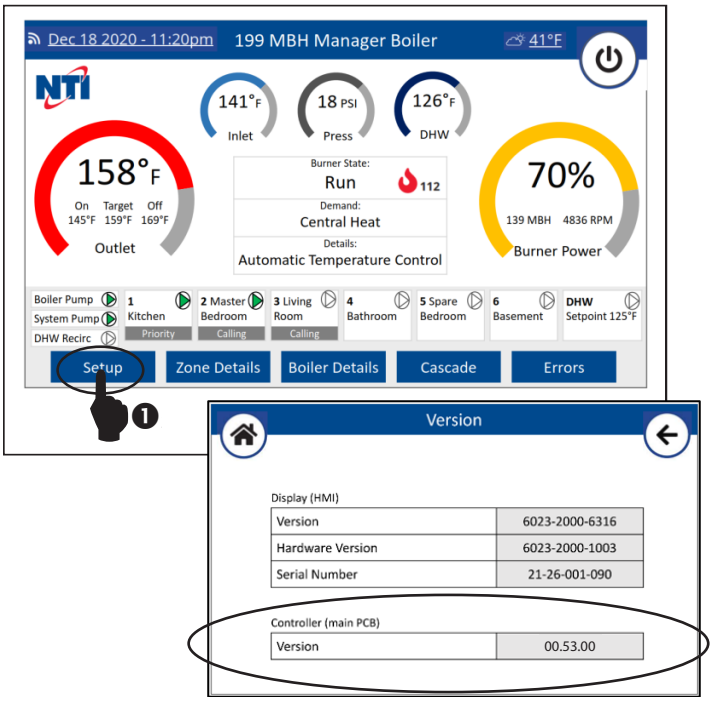

If the version displayed here is not 00.53.00, contact Ariston Canada for assistance.

2. Adjust Controller settings: from the Home Screen, select: 'Setup' → 'Tech Menu'. When prompted, input password "ntinet" and press 'Enter'. Select 'Complete Menu' → 'Enter Specific Parameter'

WARNING

These parameters (24.1.x) **MUST** be adjusted one at a time, returning to the Home Screen after *each* adjustment.

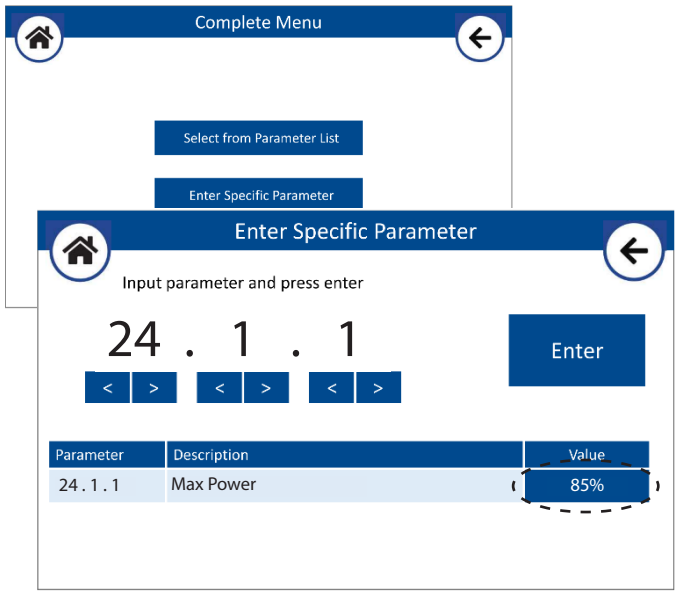

Use the arrow buttons to navigate to the correct parameter; press 'Enter' to view its details. Press on the value (e.g. '85%') to adjust it, then 'Enter' to confirm it.

Press the 'Home' button and repeat the process for each subsequent parameter.

Models	Settings			
	24.1.0	24.1.1	24.1.2	24.1.3
TFTN150	150	84	31	6
TFTN199	199	81 (LP=83)	29 (LP=27)	4 (LP=6)

STEP 4 — Perform Combustion Analysis

As part of any boiler service or maintenance, it is crucial that the boiler undergo a Combustion Calibration Procedure, as detailed in Part 9 of the IOM.

⚠ WARNING

Set-up of the gas valve must be performed by a licensed Gas Technician. Failure to perform the set-up correctly may result in incorrect operation, component failure, property damage, serious injury or death.

Combustion Calibration is mandatory upon installation and during each annual service. Failure to perform the Combustion Calibration in accordance with these instructions may result in incorrect combustion leading to burner damage or excessive Carbon Monoxide concentrations causing property damage, personal injury or death.

Carbon Monoxide – Never leave the unit operating while producing Carbon Monoxide (CO) concentrations in excess of 175 ppm. It is required that CO detectors be installed in the boiler room, as well as in each unit or living space in the building. Failure to follow this warning may result in serious injury or death.

Venting Support – Inspect the venting to ensure it is properly supported as per venting manufacturer's instructions. At a minimum, all interior vent pipe shall be supported every 36 in. ; elbows within 12 in. (each side).

STEP 5 — Affix Upgrade Label

Place the supplied label in a prominent location to advise future technicians of the boiler's upgraded status.

420062115900

This appliance was equipped with a new Controller (PCB)
Cet appareil à été équipé d'une nouvelle carte de contrôle

on *le* _____ (DD / MM / YYYY | *jj / mm / aaaa*) with Kit No. *avec trousse nº* _____

by *par* _____,

_____,
(name and address of organization making this upgrade | *nom et adresse de l'organisation effectuant cette mise à niveau*

in accordance with the Mandatory Recall and Safety Upgrade Advisory issued Aug. 2026
conformément à l'avis de rappel et de mise à niveau obligatoire publié en août 2026

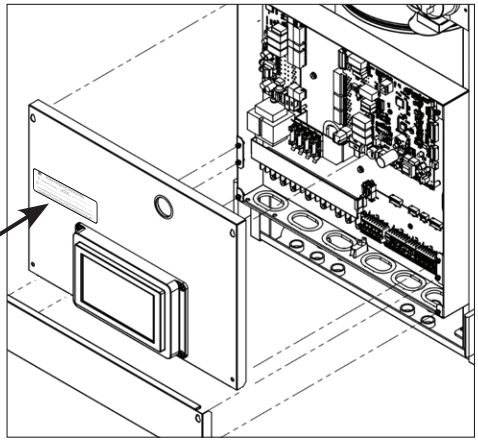

STEP 6 — Return old Controller for Reimbursement

To obtain reimbursement for completing this Upgrade procedure as instructed:

1. Return the old controller to Ariston Canada (using the supplied shipping label).
2. Go to https://ntiboilers.com/safety-recalls and submit the Reimbursement Form.

For technical support, or if you have any questions about these instructions, please contact us at NTIHelp@ariston.com, visit our website, or call us toll-free: 1-800-688-2575.

Ariston Canada Inc.
30 Stonegate Drive
Saint John, NB E2H 0A4 Canada

ARISTON GROUP